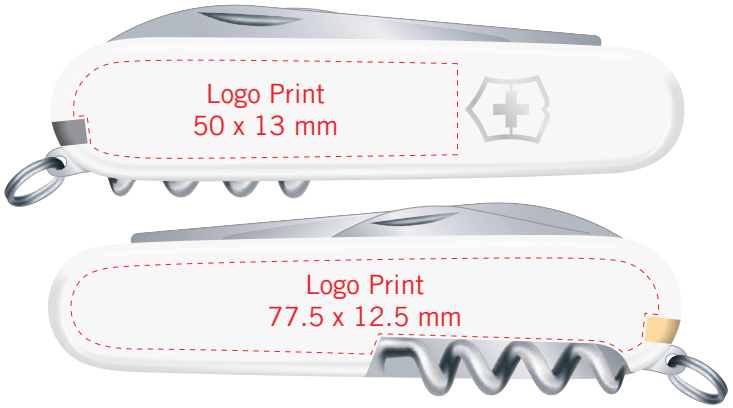
Logo Print
50 x 13 mm
Logo Print
77.5 x 12.5 mm

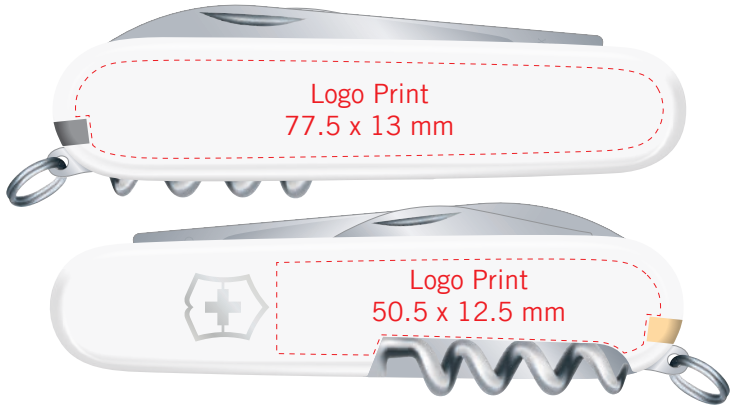
Logo Print
77.5 x 13 mm
Logo Print
50.5 x 12.5 mm

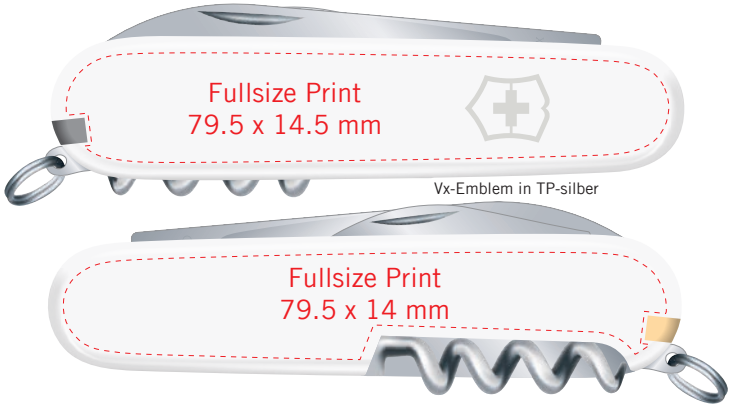
Fullsize Print
79.5 x 14.5 mm
Vx-Emblem in TP-silber
Fullsize Print
79.5 x 14 mm

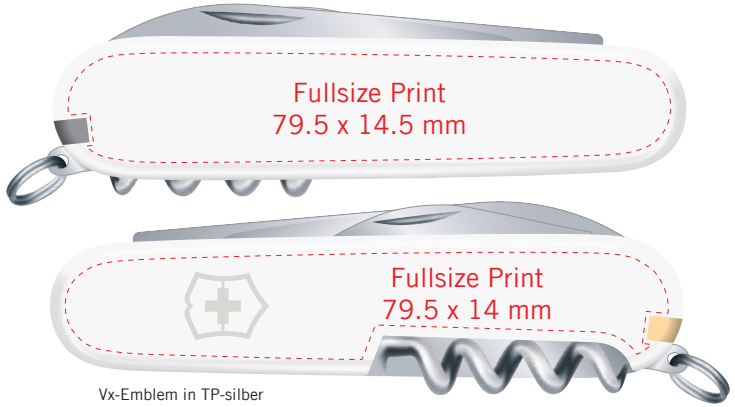
Fullsize Print
79.5 x 14.5 mm
Fullsize Print
79.5 x 14 mm
Vx-Emblem in TP-silber

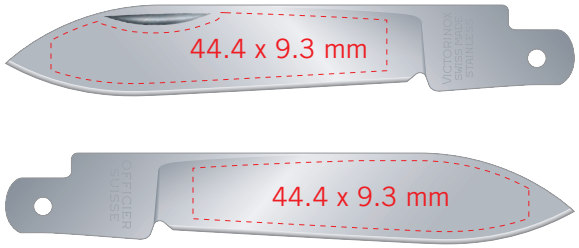
44.4 x 9.3 mm
44.4 x 9.3 mm

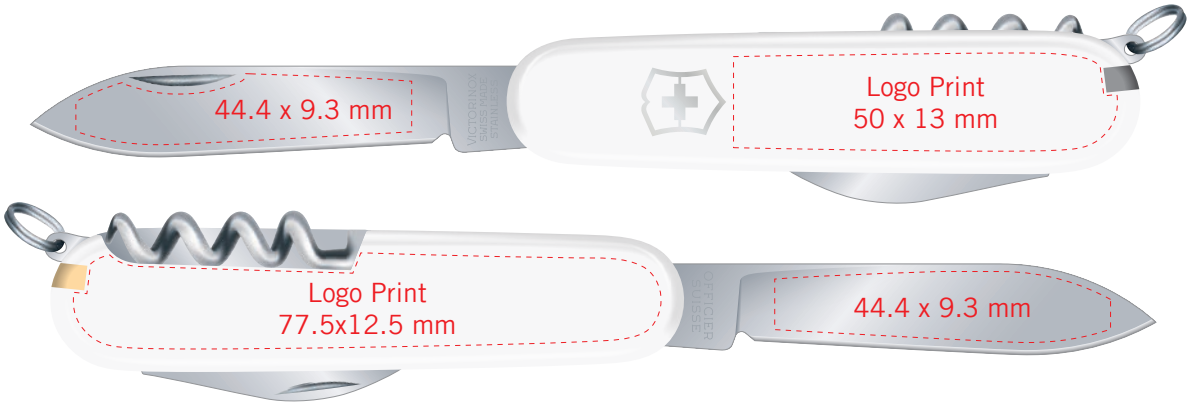
44.4 x 9.3 mm
Logo Print
50 x 13 mm
Logo Print
77.5x12.5 mm
44.4 x 9.3 mm